HAMMERTON

SPECIFICATION DRAWING

Location:	Product #: OD7170

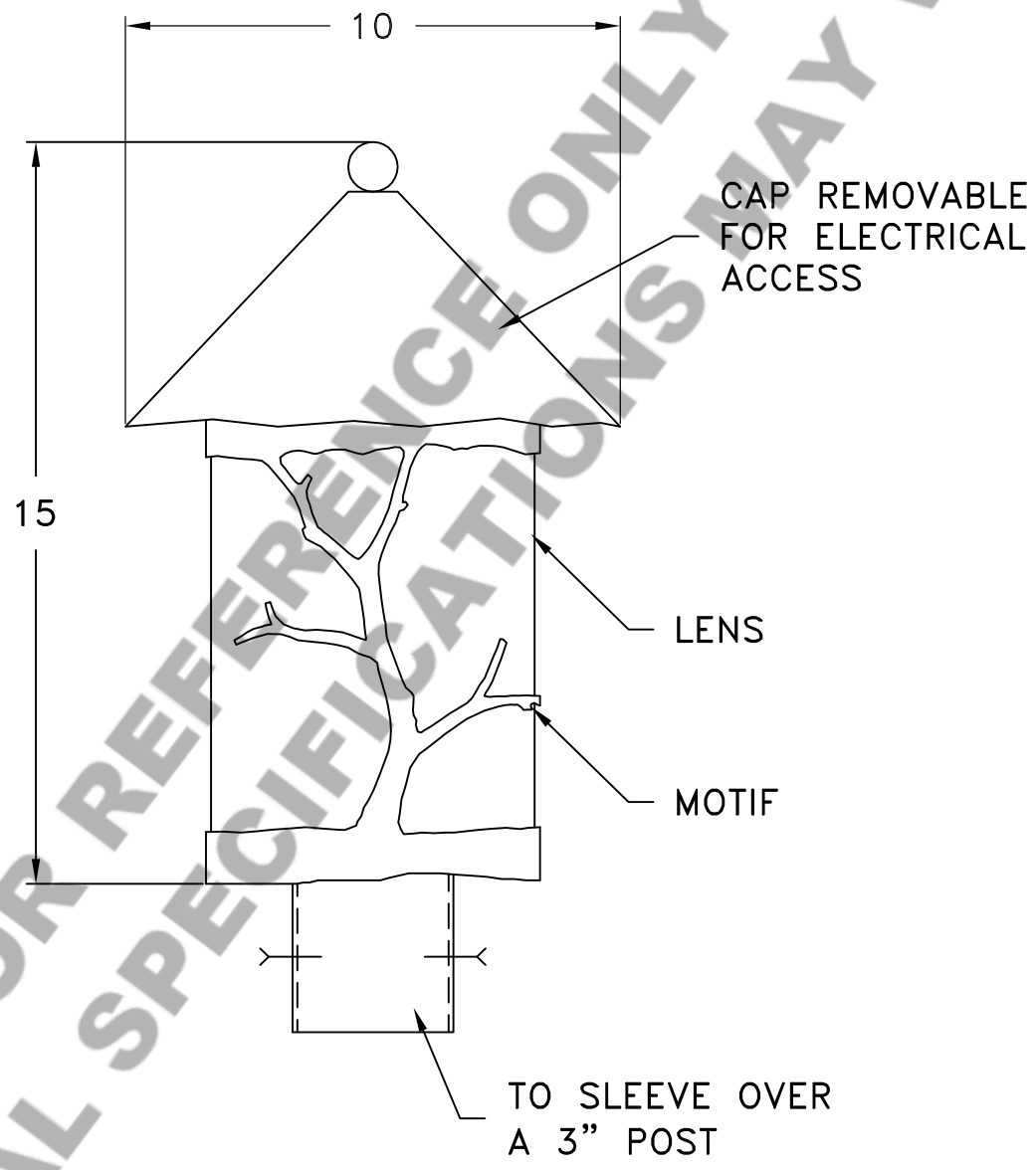

FOR REFERENCE ONLY
ACTUAL SPECIFICATIONS MAY VARY

Visit hammerton.com for product options and specifications.

Mounting Style: POST	Electrical Type: INCANDESCENT	Mounting Detail
Approximate lbs.: 7	Bulb Qty: 1 Wattage: 75	
Finish: SEE WEB SITE FOR OPTIONS	Voltage: 120	
Top Diffuser: CLOSED	Socket Type: MEDIUM	POST MOUNT
Bottom Diffuser: OPEN	UL Location: WET	

All fixtures created by Hammerton are handcrafted by artisans. Dimensions may vary up to 7/8".

©Copyright 2016. All rights in design, detail or invention of this drawing are reserved as the property of Hammerton. Any imitation or adaptation without written consent is strictly prohibited.

Hammerton Inc. · 217 Wright Brothers Dr. · Salt Lake City, UT 84116 · (801) 973-8095