HAMMERTON

SPECIFICATION DRAWING

Location:	Product #: CS2125

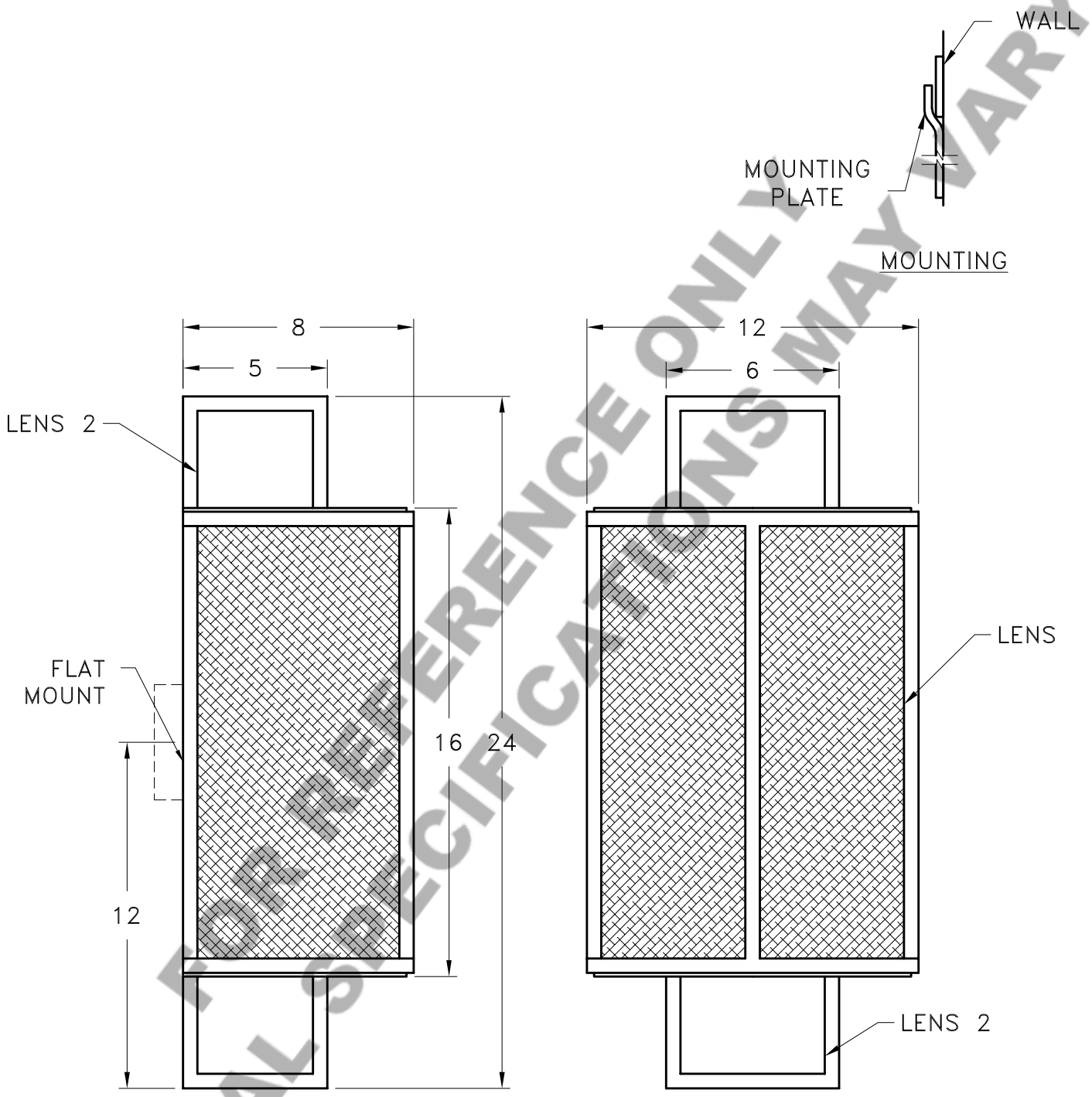

FOR REFERENCE ONLY ACTUAL SPECIFICATIONS MAY VARY

Visit hammerton.com for product options and specifications.

Mounting Style: E	Electrical Type: INCANDESCENT
Approximate lbs.: 15	Bulb Qty: 2 Wattage: 75
Finish: SEE WEB SITE FOR OPTIONS	Voltage: 120
Top Diffuser: OPEN	Socket Type: MEDIUM
Bottom Diffuser: OPEN	UL Location: DRY

All fixtures created by Hammerton are handcrafted by artisans. Dimensions may vary up to 7/8".

©Copyright 2012. All rights in design, detail or invention of this drawing are reserved as the property of Hammerton. Any imitation or adaptation without written consent is strictly prohibited.

Hammerton Inc.· 217 Wright Brothers Dr.· Salt Lake City, UT 84116· (801) 973-8095

Mounting Detail

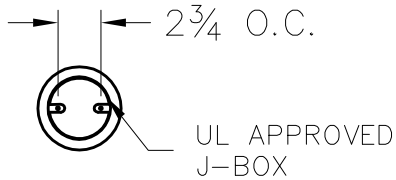

CAUTION

HARDWARE PACKET "E" MOUNTS DIRECTLY TO J-BOX.